2240LI

mascot tech spec

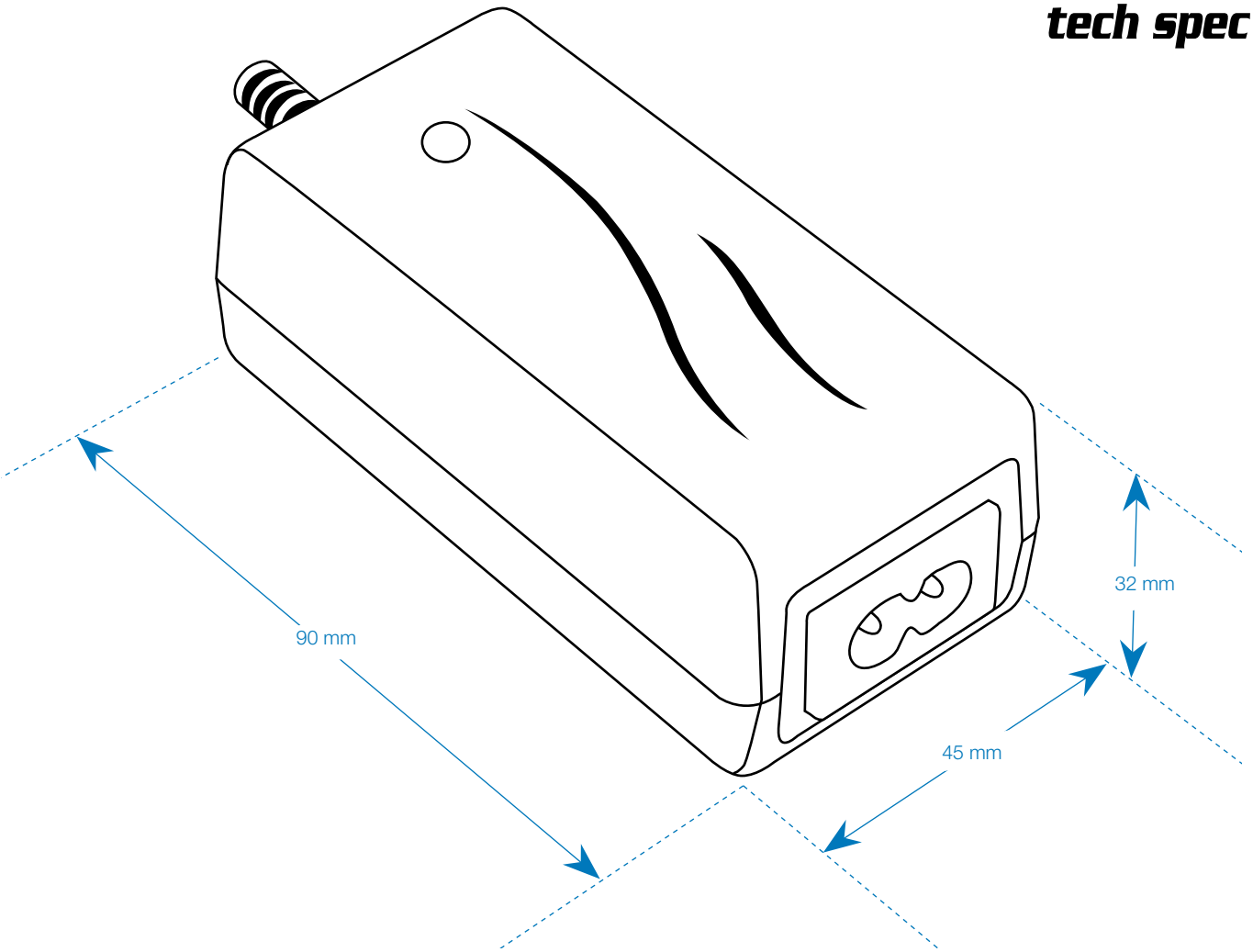

Mounting brackets

TYPE 202906

1 mounting bracket per unit
Available separately

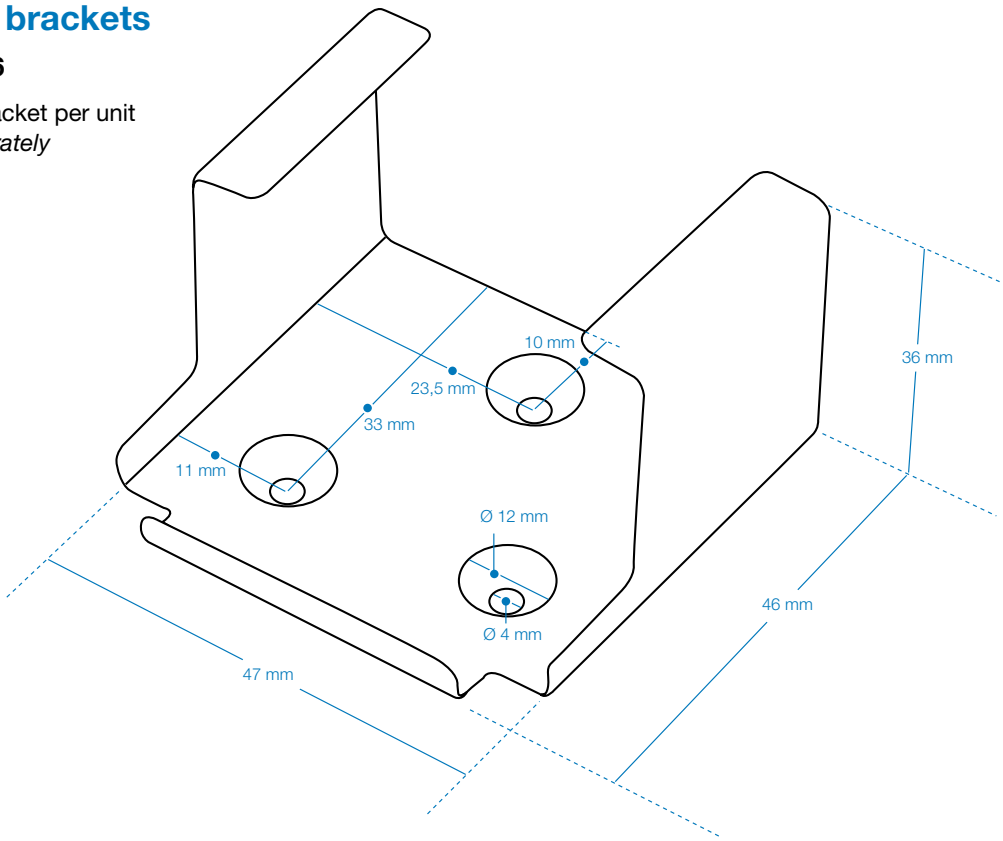

www.mascot.com **sales@mascot.no** **TS081013**

Main Office NORWAY
Box 177
N-1601 Fredrikstad
+ 47 69 36 43 00

Mascot UK
Bok 2090, Salisbury
Wiltshire SP2 2BH
+44 172 250 4853

Mascot DE, BENELUX
Hirschbergstr. 28/7
D-74838 Limbach
+49 628 795 140

Mascot DE, CH, AT
Tettnanger Str. 52
D-88239 Wangen
+49 752 895 1677

Mascot FRANCE
38 rue Leo Lagrange
F-94270 Le Kremlin Bicêtre
+33 146 587 185

Mascot BALTIC, RUSSIA
Taevakivi 15
13619 Tallinn, Estonia
+372 555 21 121

Mascot SWEDEN
Box 177
N-1601 Fredrikstad
+46 526 14025