THIS DOCUMENT IS THE PROPERTY OF KEYSTONE ELECTRONICS CORP. AND SHALL NOT BE REPRODUCED, DISTRIBUTED OR USED AS A BASIS FOR MANUFACTURE WITHOUT PRIOR WRITTEN PERMISSION FROM KEYSTONE ELECTRONICS CORP.

ACTUAL SIZE

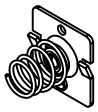

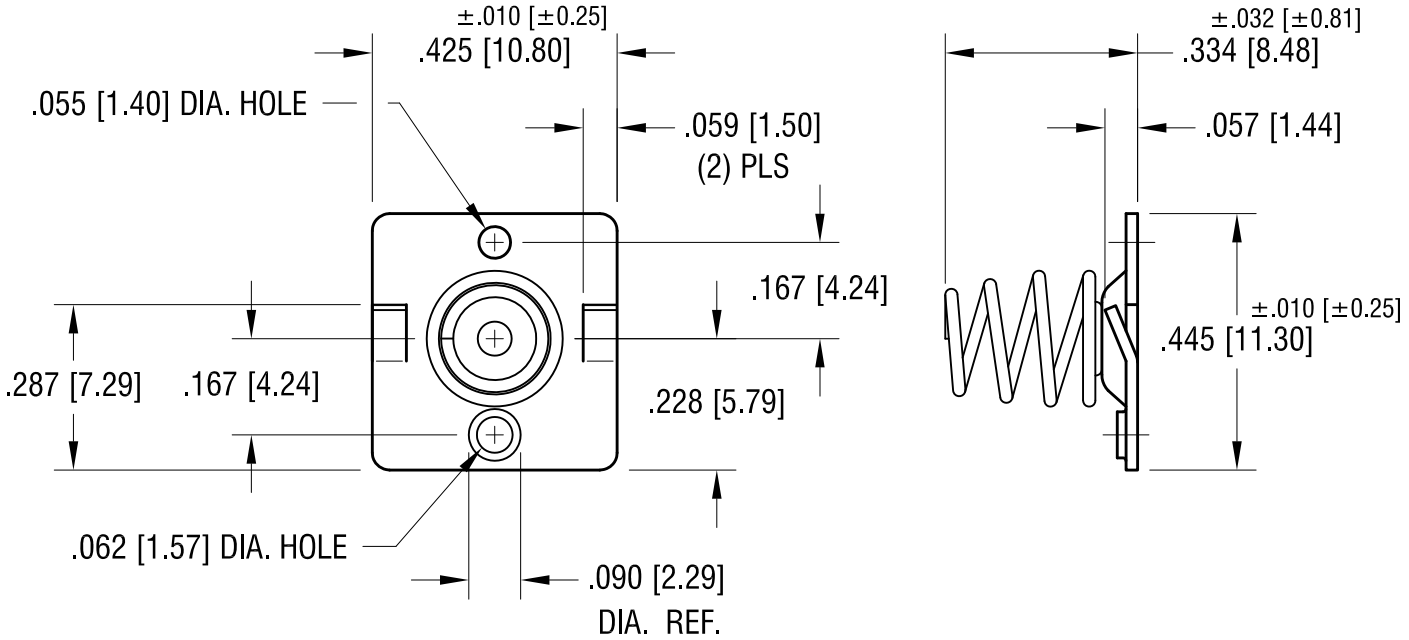


NOTES:

1. BASE:
   MAT'L - .020 [0.50] TH'K STEEL

   SPRING CONTACT:
   MAT'L - .020 [0.50] DIA. MUSIC WIRE

| DATE | DESCRIPTION | REV. |
|---|---|---|

**KEYSTONE ELECTRONICS CORP.**

www.keyelco.com • ASTORIA, N.Y. 11105-2017 • Tel (718) 956-8900

| | | | |
|---|---|---|---|
| PART NAME: 'AA' FEMALE BATTERY CONTACT | | | |
| MATERIAL: AS NOTED | | | |
| FINISH: NICKEL PLATE | DRN BY: BOONE | DATE: 2.26.96 | |
| | APP'D: LN | SCALE: 3X | |
| TOLERANCES INCH [MM]<br>DECIMAL ± .005 [± 0.13 ]<br>ANGULAR ± 1°<br>UNLESS OTHERWISE SPECIFIED | CODE: C | DWG NO. 5202 | |